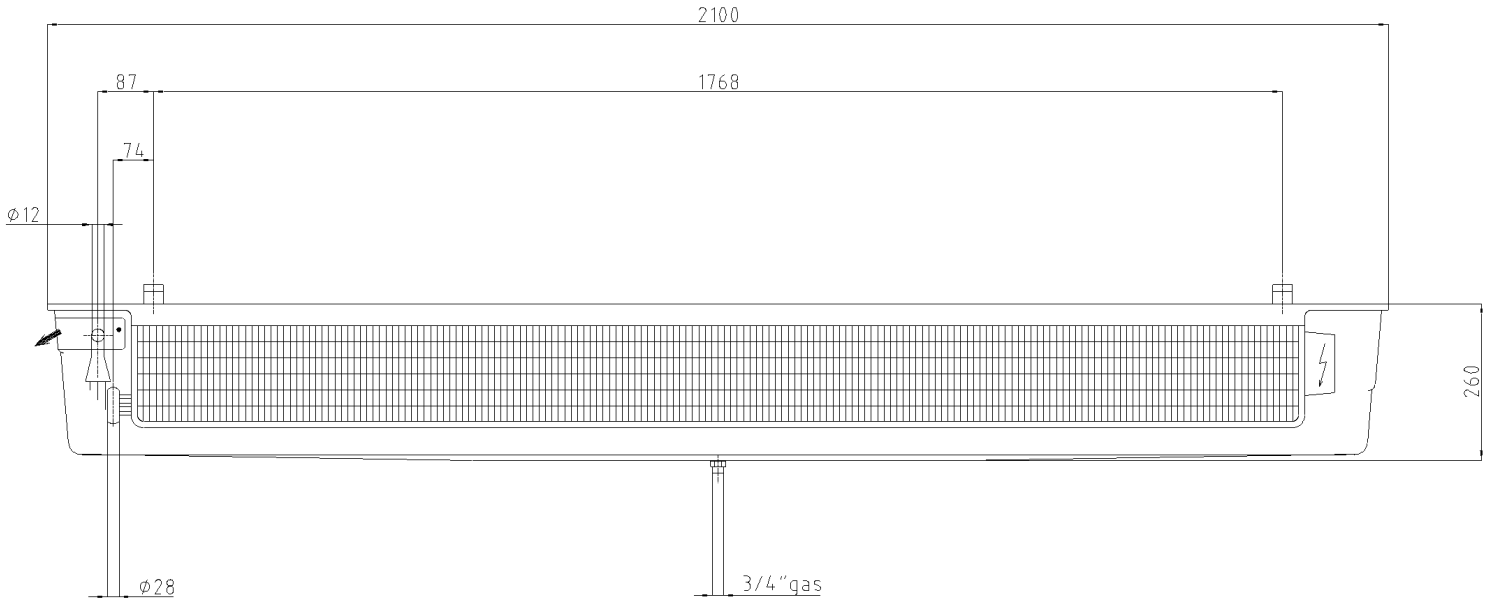


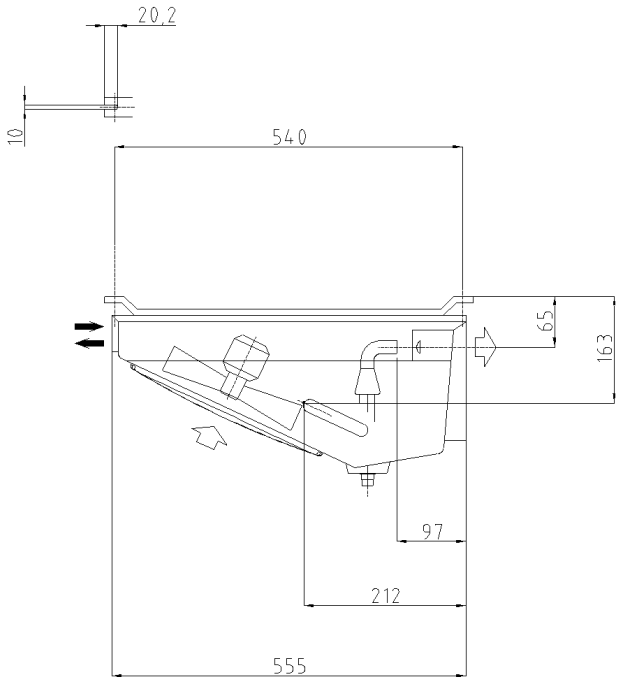


| | |
|---|---|
| Date 22-06-2015 | Type: FHA 106 EC N 50 |
| Scale 1:1 | Code: FHAEC106N |

LU·VE

Standard unit without accessories. For the connections please refer to the data sheet.