Product Code

1020/2A6

Solenoid Valve
1/4"Flare 220-230V

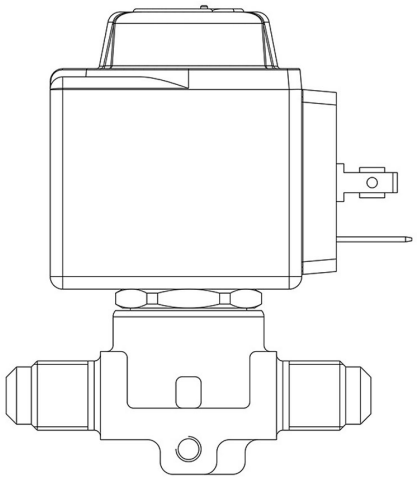

CLASSIC

Product use

Accessories for use with the following ASHRAE 34:2019 refrigerants, Class A1:
HCFC (R22)
HFC (R134a, R404A, R407C, R410A, R507)
HFO (R1234ze)
HFO + HFC (R448A, R449A, R450A, R452A, R513A, R515A, R515B)

These valves are sold in both the version without the coil (S suffix) and the version with the coil (A6 suffix for coils at 220 VAC and A7 suffix for coils at 240 VAC).

Product details

Operating principle	Direct acting
Coil Type (1)	HF2
Connections SAE Flare	1/4"
Kv [m³/h]	0,175
PS [bar]	45
TS [°C] min.	-35
TS [°C] max.	+110
Package Pcs.	18

Notes

(1) : coils mounted on the valves

Castel non si assume alcuna responsabilità per eventuali errori nei cataloghi, opuscoli e altro materiale stampato o indicato nel sito Castel.it. Castel si riserva il diritto di modificare i propri prodotti senza preavviso. Tutti i marchi in questo materiale sono di proprietà di Castel. Tutti i diritti riservati.
Castel assumes no responsibility for any errors in catalogs, brochures and other material printed or indicated on the Castel.it website. Castel reserves the right to modify its products without notice. All trademarks in this material are the property of Castel. All rights reserved.